THE VANCOUVER AMATEUR DIGITAL COMMUNICATIONS GROUP

The Vancouver Amateur Digital Communications Group came into being in January, 1979 and its activities have been increasing since then. It was formed in order to develop equipment and methods to utilize the new wide-band digital privileges allowed under the Department of Communications regulations which came into effect on September 30, 1978. One of the major aims of the group is to establish a digital communications network using high-speed packet radio techniques in order to encourage the development of amateur digital communications.

Although the word, 'amateur' has been used, the members of the working group are well-qualified professionals in the fields of digital and vhf communications, communications software, digital design and other disciplines necessary for the success of the project. The group plans to use 'state of the art' techniques wherever possible and to continually improve the technical level and function of the network once it is established. The latter would include the interfacing of the network to a time-sharing computer, a satellite communications channel, and other amateur digital communications systems when these facilities become available.

The decision to strive for 'state of the art' has affected the design of our group's system in many ways. We could have started using start-stop data link protocols but it was felt that our effort would be better spent in developing a system using bit-oriented protocols. Although we could have got a system going faster and cheaper with the start-stop protocols it would have delayed the implementation of the bit-oriented protocols which we were aiming for. It was also felt that it would create difficult conversion problems for the network users when the new protocols were incorporated. Bit- oriented protocols are much more line efficient than start- stop protocols and are being used in most of the later commercial communications systems (such as DATAPAC). For more information on bit-oriented protocols, you can read INTEL's application note on the 8273 Protocol Controller chip (ask for AP-36 which should be available free of charge from your INTEL supplier).

At this point, many will be wondering how they can use bit-oriented protocols since they only have equipment which uses either a start-stop serial interface or an 8-bit parallel interface. Our system will use a programmable communications controller (or 'Black Box') to interface all types of digital equipment to the network. The black box will act like an I/O device to a microcomputer and act like a microcomputer for less intelligent I/O equipment such as terminals, keyboards, printers, modems, teletypes, etc. It will be a dedicated function microcomputer in this application and not a general purpose microcomputer. See another page for further description of the terminal node controller and specifications.

We felt that the use of a communications controller would solve some major network development problems that would be encountered in the future as well as solving more immediate problems. Some of the advantages of this approach are:

1. Getting equipment to provide bit oriented protocols - there isn't any available equipment on the surplus market and none is marketed at a reasonable price.

2. Having to write software for a multitude of equipment and microprocessors as well as the difficulty of maintaining it. The time and effort required for someone to write good software should not be underestimated. It is unreasonable to go through the same effort over and over again for every system in operation now and new ones yet to be announced.

3. Providing an interface for terminals, teletypes, keyboards, printers, etc. to the network. With the 'black box' approach a user does not have to be the owner of a microcomputer which can considerably reduce the cost of entry to the system. Also, the microcomputer owner can keep his system available for other purposes instead of having it tied up running a communication program.

4. Getting standard interfacing and protocols established among the network users. Since everyone would have the same equipment there would be a lot more cooperation.

5. Rapid incorporation of changes in the network. In the beginning, the network will undergo a lot of development as we learn more and more about digital communication. A change in network protocol could be simply done by installing a re- burned EPROM in each black box. Think of the problems of incorporating a change when there are dozens of different programs running in different equipment on the network.

For the next part of this discussion, a definition of a few terms is in order. A 'node' in a data communications network is a point in the network where data is sent to or received from. The network we will be using will support three types of nodes eventually:

The TERMINAL node is the end user interface to the network. It only has to keep track of its own information and follow the protocols of the network. All functions of the network are basically directed at getting data passed from one terminal node to another.

The STATION node handles the virtual connections between the terminal nodes. All data on the network will pass through at least one station node. The station node provides network services such as routing and access control. It will also provide status information on the network, logging and usage information upon request. Since the station node has to keep track of everyone's data and status and routing information, the program and storage requirements for the station node are larger and more complex than that required for the terminal node.

The REPEATER node is used to assist communications between station nodes and terminal nodes. It retransmits correctly received packets unmodified to provide missing RF connections. It requires minimal intelligence but must be very reliable since it will probably be located at the top of some mountain. The initial local network here in Vancouver will not need a repeater node because the station node will be well-situated. Later, when the geographical area of the local network needs to be extended, repeater nodes will be set up.

I will sometimes use the words station, terminal and repeater when I am referring to a station node, terminal node or repeater node respectively.

RF AND MODULATION SYSTEM

The VADCG wants to develop equipment which will fully utilize the 100kHz. bandwidth allowed by the current regulations for packet radio. Unfortunately, none of the equipment manufactured for or used by amateurs is particularly suitable for this purpose. There are usually two problems with most equipment - narrow bandwidth and long switching times between transmit and receive. Most VHF equipment is designed with a bandwidth designed for audio and this usually limits the top speed to about 2400 Baud. The switching time for such equipment is in the order of 100msec. The group in Ottawa is working with VHF Engineering modules and using a single pin diode switching circuit which gives a Baud rate of 9600 Baud and a switching time of 1 ms.

We believe that a 220mHz. transmitter and receiver could be made up in kit form which would incorporate the special requirements of amateur digital communications. We feel that it could be made cheaply and yet reliably operate at rates greater than 50,000 Baud with switching times of less than 1 ms. We have been conducting preliminary experiments with this in mind and have had very promising results so far. However, we expect it will be several months before we have something developed because we are concentrating on development of the digital interface hardware and software. We have transmitted data with a good 'eye' pattern at rates up to 140,000 Baud through a standard consumer FM tuner's 10.7 mHz. IF strip under laboratory conditions.

In the meantime, what are we doing to provide local network communication? Well, we are using surplus 202- type modems and operating at the very modest Baud rate of 1200 Baud. This is an interim solution until the aforementioned 220MHz. equipment becomes available. We are also using the 2 metre band for testing at this low speed. This means that the initial entry for the pioneers can be inexpensive because he can use his existing 2 metre transceiver without modification. He can still use it for it's original purpose. The 202-type modem shifts between frequencies of 1200 and 2200Hz. When and if we run out of surplus modems we will use a modem similar to that of the Montreal group. I understand it does a very good job and the component cost is only about $30.00. We have not encountered any communication problems at all while using these 202-type modems. In fact, we have been able to record packets directly from a hand-held transceiver onto a portable tape recorder and replay the packets back through the microphone.

The network as planned at the present time would use bit- oriented protocols with VHF or UHF transceivers providing communications channels between the various nodes in the network. All nodes would use the same channel in a time- division multiple access arrangement. No node would transmit until the channel was clear. Other protocol conventions would assure that the station node has priority over other types of nodes on the channel and prevent any one group or group of users 'hogging' the channel at the expense of others.

VADCG PACKET RADIO NETWORK PROTOCOL

While I was trying to design a suitable PR protocol, it was suggested, several times, that an amateur PR network should use an existing commercial protocol, specifically the X-25 standard used by DATAPAC and other packet networks. Unfortunately, at the frame level this is a point-to-point, full duplex protocol. A multipoint, half duplex frame level protocol is required for communicating over a common radio channel with many terminals.

If the X-25 frame level protocol is no good, what about the X-25 packet level protocol? Well, it is possible to incorporate the packet level protocol in the terminal but the program memory in the terminal would have to be much larger. The fact is that many of the standards in the X-25 protocol either are concerned with the specific environment of the telephone company or with routing and flow control which are the responsibility of the station and not the terminal. Also, most of the functions required by an amateur packet radio network are not defined in the X-25 protocol.

I feel that we will only need the X-25 protocol when we need to interface the network to an existing communications system using the X-25 standards. At that time, the conversion could be done in a GATEWAY node on the system. A gateway is a node which converts protocols on one type of network to those protocols used on another network. The result is that all users on both networks can communicate with one another in spite of significant differences in protocols. They all appear to be on one larger network.

Enough talk of X-25 protocols, let's talk about the VADCG protocol. It is a bit-oriented protocol and bears many similarities to other bit-oriented protocols. In fact, current industry standards were used as much as possible in its design. The basic packet format is shown in the following diagram:

2	1	1	1	1	n	2	1
SYNC	F	A	C	PH	INFORMATION	FCS	F

F = FLAG
SYNC = PREFRAME SYNCHRONIZATION
A = TERMINAL ADDRESS
C = CONTROL
PH = PACKET HEADER
FCS = FRAME CHECK SEQUENCE

Figure 1

SYNC : This field is used for synchronizing the receiving equipment before sending the flag following. It is only used for the first packet in a group of packets. It is 16 bits of alternating zeros and ones to give a maximum number of transitions for synchronization.

FLAG : A special 8-bit character with the binary pattern of 01111110 or 7E in hexadecimal. It marks the beginning and end of the packet. If another packet is sent immediately after this packet, then the second packet may use the ending flag of the first packet as its beginning flag.

ADDRESS : This is an 8-byte field with the address of the terminal or repeater that this packet is coming from or going to. An address of FF (Hexadecimal) is used as a broadcast address and an address of 00 is used before the terminal is signed on the network. The other 254 addresses will be used for local terminal addresses. These addresses are dynamically assigned by the station at sign on time and may be reused by another terminal after the previous user has signed off. This address field may be extended when we require more than 254 users simultaneously signed on to a station. Note that this does not mean that the network is limited to 254 simultaneous users since eventually there will be several stations in the network. The higher level network addressing will be done by the stations and will be transparent to the terminals. In fact, all network addressing is transparent to the terminal user, who only works with network 'names' or call-signs.

CONTROL : This is an 8-bit field which describes the type of packet this is. It also contains acknowledgment information which ensures that no packets are missed or processed out of order. The protocol allows a maximum of seven packets to be transferred across the link before an acknowledgment is required. It will handle partial acknowledgments.

PH : Packet Header - This is a one byte field which, for the time being, will be used to control whether the terminal is sending to the network services or to another terminal. It will be an Ascii blank (20 Hexadecimal) when the packet is for another terminal and non-blank for communication with network services.

INFORMATION : This field contains a variable number of bytes of data. In certain supervisory packets it will not be present.

FCS : This Frame Check Sequence ensures that no bits are incorrect in the packet. It is 16 bits long.

TERMINAL NODE CONTROLLER DESCRIPTION:

(Note that the term, "Terminal Node" refers to the end users of the network, typically the "Ham" with a VHF transceiver, terminal controller, and a Teletype or microcomputer.)

The Terminal Node Communications controller has been built to interface the network user's digital equipment (Teletype, microcomputer, etc.) to his VHF transceiver. It will accept data from the digital equipment, convert it into packets (or frames), and actuate the transmitter to send the packet into the network. Likewise, it will receive packets from the receiver intended for the Terminal Node and pass the data from the packet to the user's digital equipment. It will handle all the bit-oriented protocols required by the communications link and all the network protocol as well as any ASCII - Baudot conversions or other code conversions as required.

The controller was designed to be as flexible as possible and be adaptable to all future requirements of the network. Flexibility is built in by having all functions under software control with the program in reprogrammable EPROMs. Any changes in network protocol or a change in the users digital equipment may be quickly compensated for by substituting one EPROM for another. The controller will handle both serial and parallel devices with full handshaking lines provided for. The serial Baud rate, number of stop bits, number of data bits, and parity requirements are all under software control. Even the choice of EIA levels, TTL levels or 20 ma. current loop signals on the serial interface has been provided for. The connector for the digital equipment is a DB-25S with standard wiring for the immediate hookup of a computer terminal but with the proper cable connections may be interfaced to practically any digital equipment. Here are some examples: ASCII or Baudot teletypes, computer terminals, modems and microcomputer serial or parallel I/O ports.

This flexibility extends to the transceiver side of the controller where standard Baud rates from 600 Baud to 38.4 KiloBaud are supported. The connector is a DB-25S with wiring to connect to a standard modem. A dip switch for selection of asynchronous or self- clocking modems is provided. Lines for control of the transceiver control are also present on the connector. Since the data rate and the type of modulation used are subject to change, the modem will be separate from the digital part of the interface. (Although it may be in the same cabinet which will have room for the power supply as well.)

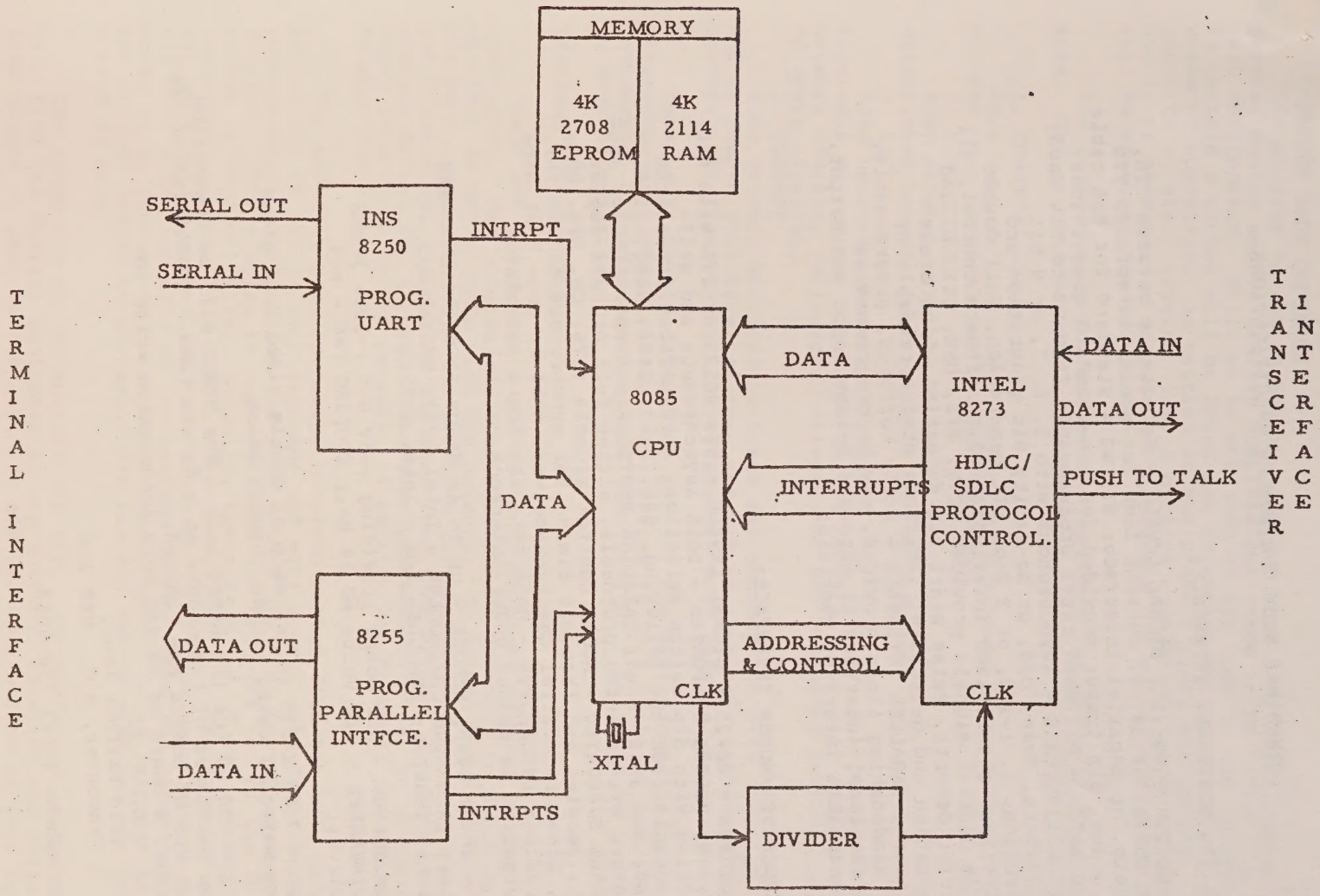

VADCG PROGRAMMABLE COMMUNICATIONS INTERFACE

TERMINAL NODE CONTROLLER SPECIFICATIONS

DIGITAL EQUIPMENT INTERFACE:

CONNECTOR - DB-25S; SIGNAL LEVELS - Selectable between TTL, EIA RS232, or 20 ma. current loop for serial interface, TTL levels for parallel interface; WIRING - Standard for EIA cable to modem, dip jumper provided for non-standard connections; BAUD RATES - All Baud rates programmable from DC to 56k Baud; SERIAL INTERFACE - Asynchronous with 5, 6, 7, or 8 bit characters, Even, Odd, or No-Parity Bit generation and detection, 1, 1-1/2, or 2 Stop bit generation, Full double buffering, prioritized interrupts under software control, All modem control signals provided (CTS, RTS, DSR, DTR, RI and Carrier Detect), False start bit detection, Line break generation and detection, interface status readable by software; PARALLEL INTERFACE - Fully buffered, programmable, all handshaking lines provided, may be programmed as bidirectional interface or separate 8-line input and output, programmable interrupt controls;

TRANSCEIVER/MODEM INTERFACE:

CONNECTOR - DB-25S; SIGNAL LEVELS - EIA RS232 or TTL with dip jumpers; MODEMS SUPPORTED - Both asynchronous and self-clocking with dip switch selection; BAUD RATES - dip-switch selectable from the following, 600, 1200, 2400, 4800, 9600, 19200, and 38400 Baud; DATALINK PROTOCOL - Either SDLC or HDLC or other bit-oriented protocols, either full or half duplex; SIGNALS SUPPORTED - Modem control signals (CTS, CD, RTS, DSR, DTR), Receive and transmit timing for synchronous modems (RT, TT), Lines to control the transceiver, NRZI or non- NRZI data supported; INTERRUPTS - Both data transfers and status information is passed under interrupt control;

CPU - Intel 8085; MEMORY - up to 4K EPROM (2708) and 4K RAM (2114); DATA LINK CONTROLLER - Intel 8273; SERIAL I/O - National INS8250; PARALLEL I/O - Intel 8255;

POWER SUPPLY - Off board providing +-5V and +-12V; POWER REQUIREMENTS - 120 Volts AC 60 Hz.; COOLING FAN - not required;

BOARD - 7.75 X 8.5 inches made of double sided G-10 glass epoxy material using plated through holes.

PRICE - $30.00 for the board only. The VADCG will be organizing group purchases of components at a future time. Quantities of the first run of boards are limited.
To order a board or to get more information write to:

V.A.D.C.G.
1263 Balfour Ave.,
Vancouver, B.C. V6H 1X6

or telephone (604) 738-5683

STATION NODE SOFTWARE

The program to run in the station has been under development for several months and is finally complete but needs to be tested out in the real environment. While we do not know of any bugs in the software, it is certain a number will be found and corrected during the first few weeks of operation. As written at the present time, the program supports a 'star' network. i.e. A network consisting of one station and a number of terminals. Support for repeaters and multiple station networks will be written when required.

The program supports the network protocol as outlined in another area. The network service commands supported at the present time are:

1. CONNECT call-sign
Asks network services to establish a virtual connection between your terminal and another terminal.
2. DISCONNECT
Asks network services to break the connection established between your terminal and another terminal.
3. LIST
Asks network services to send to your terminal a list of all terminals at present signed on to the network. The list indicates the network address, call-sign, call-sign of any connected terminal and status of every terminal.
4. SIGNOFF
Asks network services to break any connections with other terminals and to remove your terminal from the set of terminals signed on to the network. It frees any network resources your terminal may be using.

These four terminal commands provide the basic commands required for inter-terminal communication. The system is in a state of rapid development and more commands and functions will be added to the network as soon as possible.

TERMINAL NODE SOFTWARE

There are two separate and distinct programs running in the terminal controller. One program contains the network protocol required for the terminal to communicate with the network. It drives the 8273 HDLC/SDLC protocol controller chip and switches the transceiver between transmit and transceive. I call it the Line Interface Program (or LIP). The other program drives the digital devices or physical terminal or microcomputer being interfaced to the network. I call it the Terminal Interface Program (or TIP).

The LIP will pass correctly received packet data for this terminal to the TIP in the correct sequence and will accept data from the TIP for incorporation into packets and will ensure they get passed to the station. This program has been written and occupies two of the four EPROMS in the controller. Actually, there is a lot of extra room for expansion in the second EPROM. Every terminal uses the same LIP because all terminals must use the same protocol (speak the same language). The LIP will drive the 8273 to its maximum speed. When the network protocol needs to be changed to incorporate improvements, it is intended that the two old LIP EPROMS be exchanged for two new EPROMS with the new program burned in them.

The other two EPROMS contain the TIP. The TIP's job is to accept data from the digital equipment at the terminal location and build it into blocks to pass to the LIP. It also accepts blocks of data from the

LIP and passes them to the digital equipment. It is the 'personality' module for the terminal. Each terminal will use a different TIP because each user will have different digital equipment. For example, a network user may have a model 15 Teletype which he wants to use on the network. The model 15 runs at 45.45 Baud and uses the Baudot code. His TIP would initialize the serial interface on the controller to run at 45.45 Baud, with 1-1/2 stop bits and 5 data bits. His TIP would also likely translate the Baudot code into Ascii to be sent out on the network and translate the Ascii code from the network to Baudot to be sent to the model 15. His TIP would also have a field containing his call-sign and other information used when signing on to the network. Since the model 15 is a 'dumb' terminal, the TIP could also be written to give the model 15 some 'intelligence'. His TIP would be substantially different from that of another user who, for instance, had a 9600 Baud Ascii video terminal or from a TIP for a TRS-80 microcomputer.

The TIP and LIP will use a simple software protocol to communicate with one another. Both of these programs are basically interrupt driven after initialization and generally operate independently from one another. This makes the software easy to write.

As you might imagine, this ambitious project requires a lot of work and some money. At present our funding is coming from individual donations but is not sufficient to meet our needs for the immediate future. For a $10 donation we will mail an extensive information package with circuit diagrams and component information for all the boards. You will also get progress reports and newsletters periodically. Our mailing address is:

V.A.D.C.G.
1263 Balfour Avenue
Vancouver, B.C. V6H 1X6

We hope that someday you will be able to sit down in your hamshack with your terminal connected through the interface to your low power vhf transceiver and ask the network to connect you with (for example) VK3XXX in Sydney, Australia and almost immediately get the message back on your screen: "Connection with VK3XXX established - begin communication"

Douglas Lockhart, VE7APU